NOTE: DIMENSIONS LOCATED IN BOXES ARE COMMON
SETBACK DIMENSIONS FOR EACH FITTING

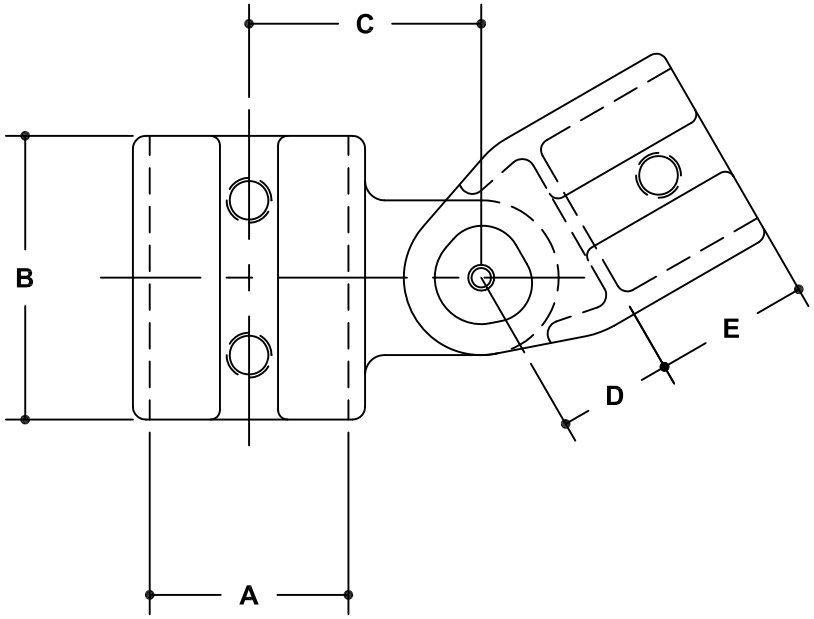

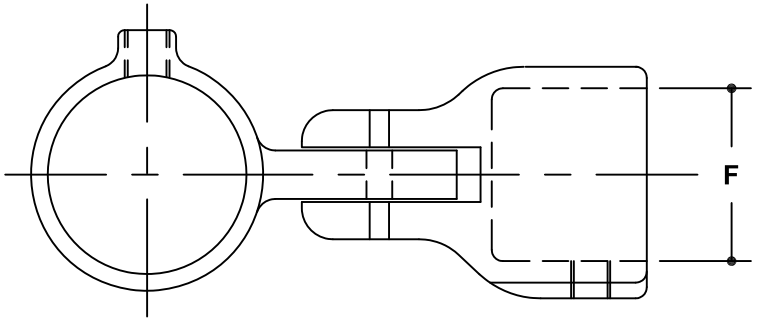

#17 Adjustable Reducing Elbow or Tee Assembly

SCALE: HALF

ENGLISH UNITS (Inches)							
PIPE SIZE	**A**	**B**	**C**	**D**	**E**	**F**	**G**
2" x 1½"	2.41	3.88	2.63	1.11	1.73	1.93	
1½"x 1¼"	1.93	2.75	2.25	1.13	1.44	1.68	
1¼"x 1"	1.68	2.38	2.06	0.86	1.14	1.33	
1" x ¾"	1.33	2.00	1.63	0.97	0.97	1.07	

METRIC UNITS (mm)							
PIPE SIZE	**A**	**B**	**C**	**D**	**E**	**F**	**G**
2" x 1½"	61	98	67	28	44	49	
1½"x 1¼"	49	70	57	29	37	43	
1¼"x 1"	43	60	52	22	29	34	
1" x ¾"	34	51	41	25	25	27	